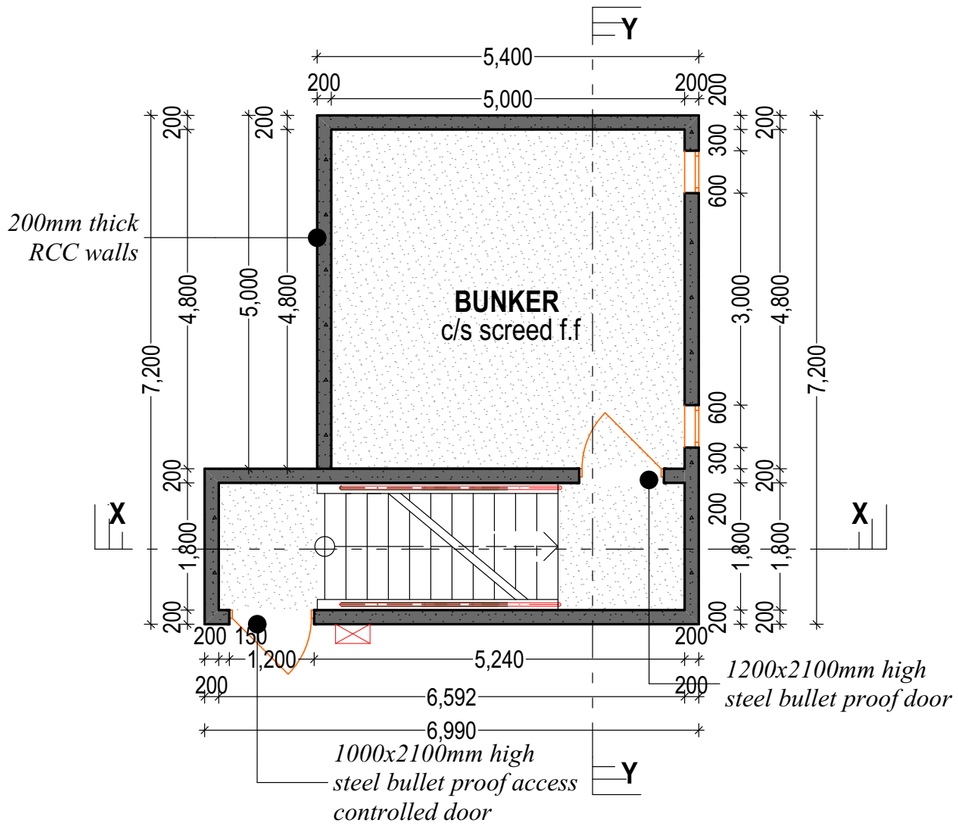

BUNKER FLOOR LAYOUT

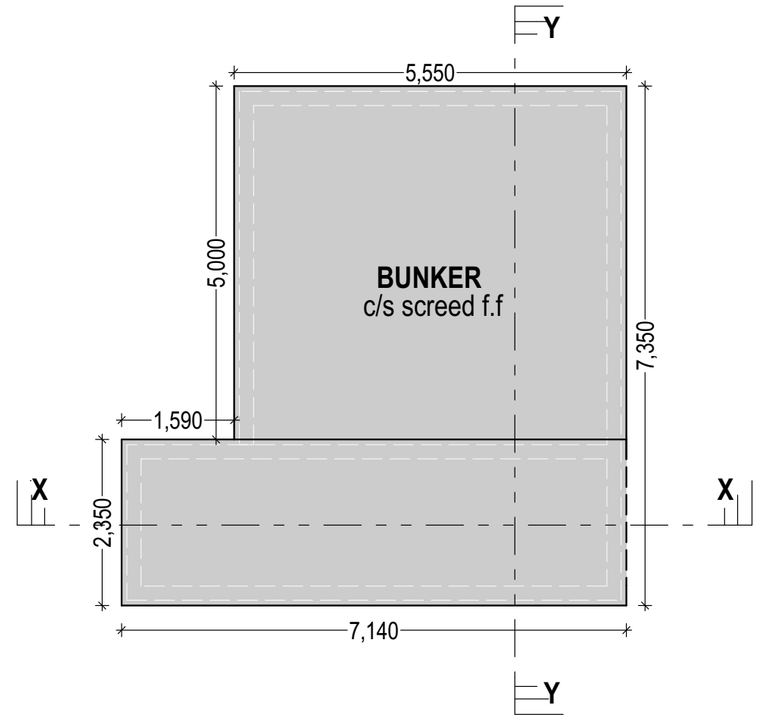

BUNKER ROOF SLAB LAYOUT

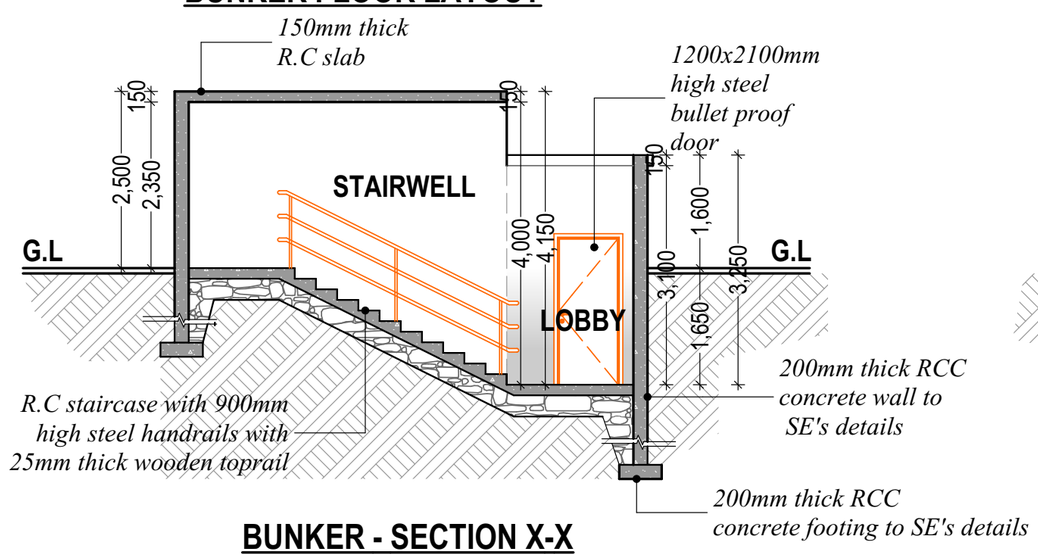

BUNKER - SECTION X-X

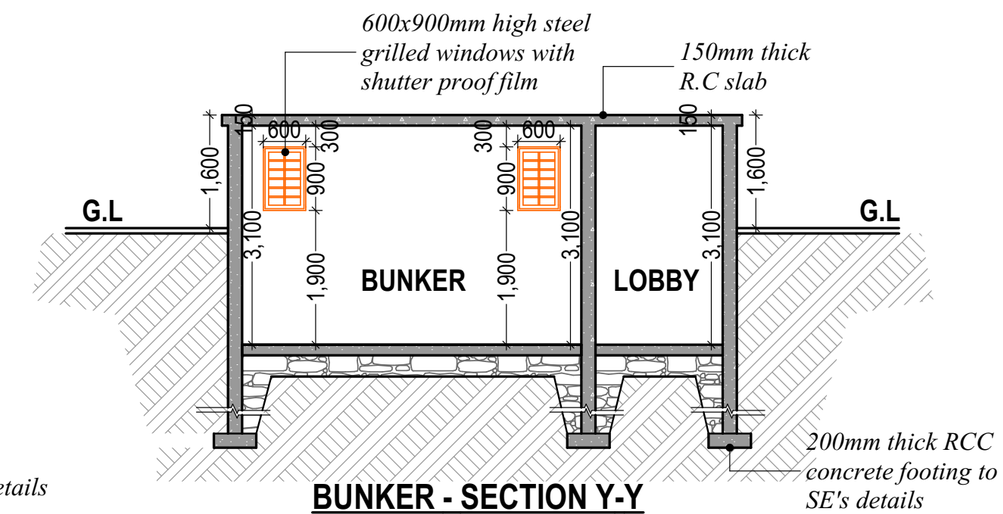

BUNKER - SECTION Y-Y

65 YEARS
International Organization for Migration

PROJECT:
PROPOSED UNCC KISMAYO CAMP

DRAWINGS TITLE:
BUNKER/SAFE HAVEN DETAILS